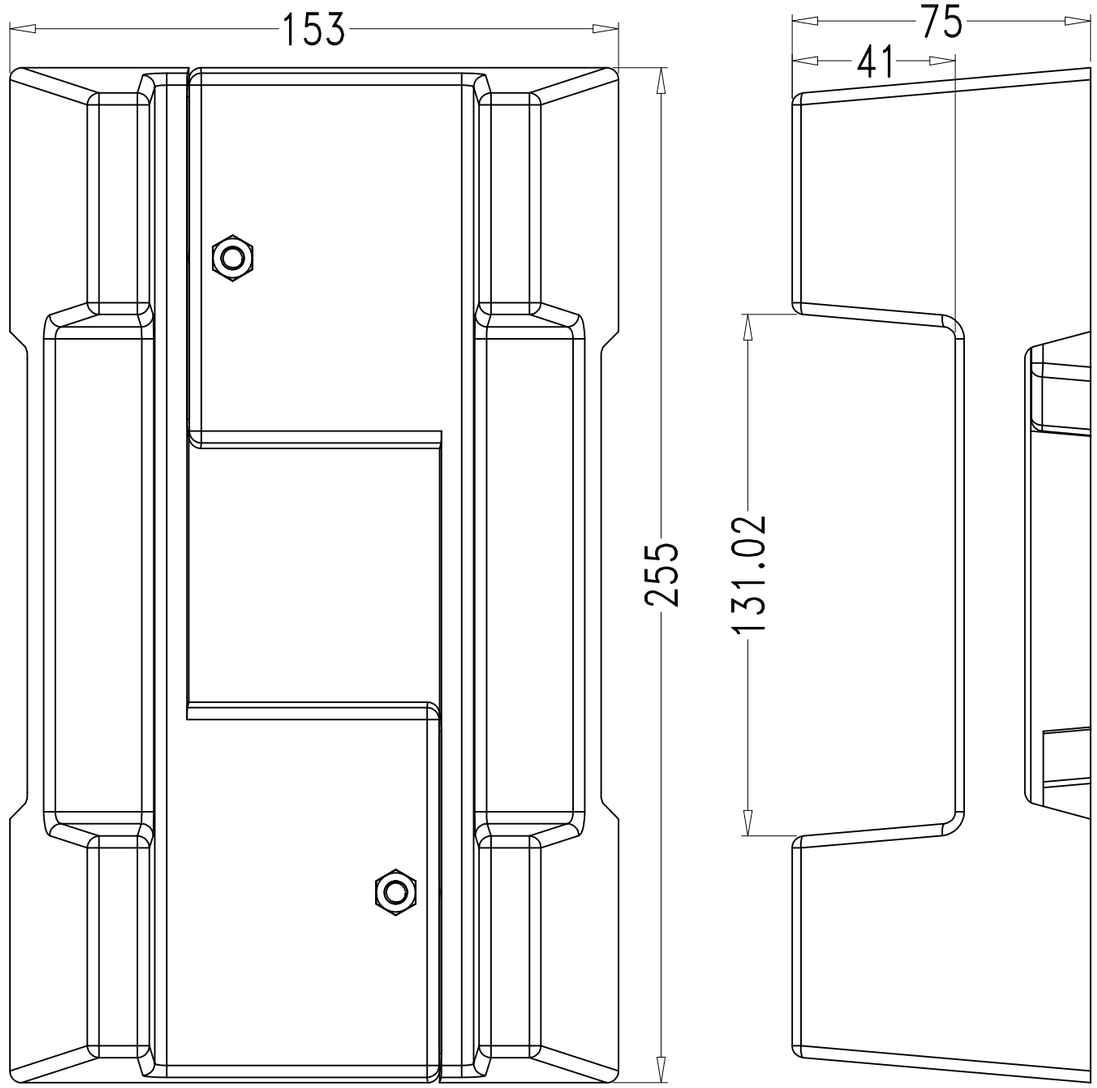

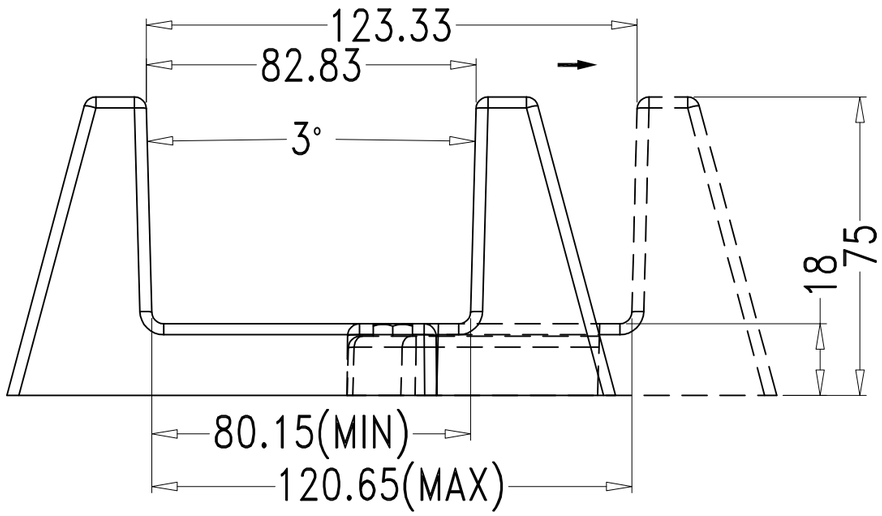

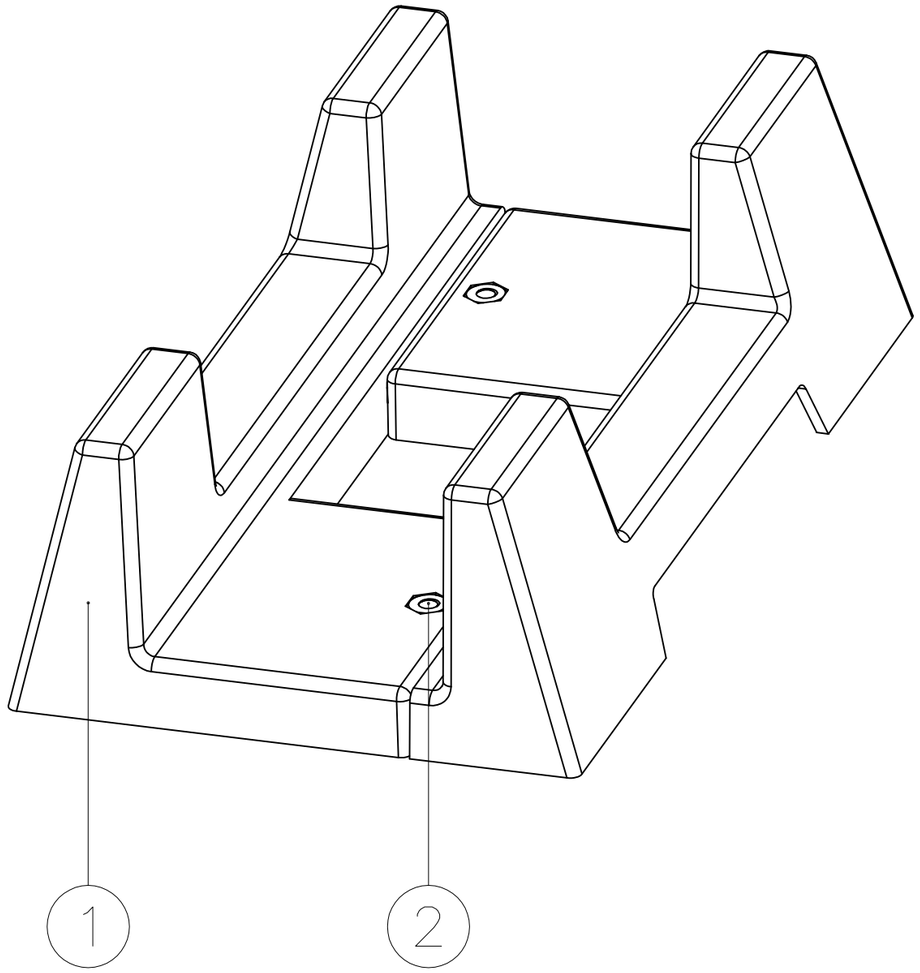

2	screws	SET	2	*			
1	support	ABS	2	19004-A1			
Drawing	Auditing	Confirm	Product Name	Aluminum case	Project View		A
			Product Type	BPT 19004	Drawing Scale	1:1 (MM)	

BAHAR
www.bahar-enclosure.com

BAHAR ENCLOSURE GmbH